SaMASZ®

# FLAIL MOWERS

REAR, FRONT
EXTENSION ARMS AND ATTACHMENTS

www.samasz.com

TABLE OF CONTENTS


| | Page |
|---|---|
| **Flail shafts - description** | 4 |
| **Flail knives** | 5 |
| Rear / front flail mowers - light class: **PIKO** | 6 - 7 |
| Rear / front flail mowers - middle class: **MIDO** | 8 - 9 |
| Rear / front flail mowers - middle class: **GRINO** | 10 - 11 |
| Rear / front flail mowers - super heavy class: **MAMUT** | 12 - 13 |

| | |
|---|---|
| Rear flail mowers - light / middle class: **KBR L / LBR** | 14 - 15 |
| Rear-side flail mowers - middle / heavy class: **KANDU / KBRP** | 16 - 17 |
| Self-collecting flail mowers - plastic / stell container: **IBIS / EMU** | 18 - 19 |
| Rear extension arms: **KOLIBER / KWT / CAMEL** | 20 - 21 |
| Rear extension arms: **KWT 651** | 22 - 23 |
| **Extension arm attachments** | 24 - 29 |

# GENERAL CHARACTERISTICS OF FLAIL SHAFTS

## LIGHT CLASS
(PIKO, KBR-L, LAMA)

**1.** Flail shaft - ϕ 108 mm (4 1/4''),
wall thickness 6,3 mm / 1/5''
**2.** Cutting shrubs (up to 3.5 cm - 1 2/5'' thick depending on knife type).
**3.** Ground following bar - ϕ 108 mm or 133 mm (4 1/4'' or 5 1/4'').

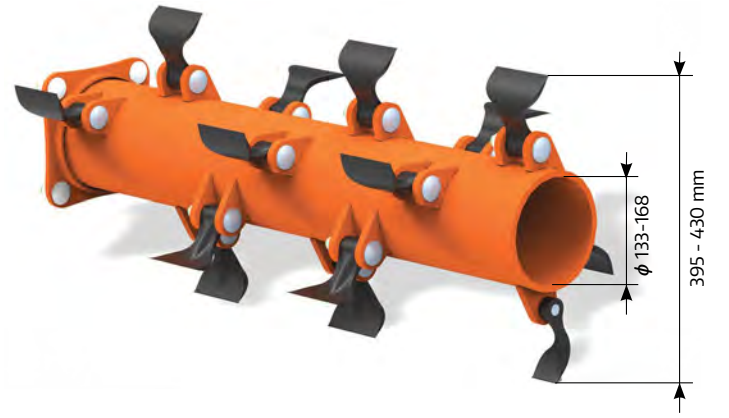


## MIDDLE CLASS
(MIDO, GRINO, KANGU, KW, KBR)

**1.** Flail shaft :
- Grino - ϕ 168 mm (6,3/5''),
- Mido, Kangu, KW, KBR - ϕ 133 mm (5 1/5''),
wall thickness:
- Grino, KW, KBR - 8,8 mm / 2/5''
- Mido, Kangu - 10 mm / 2/5''

**2.** Cutting shrubs and bushes (up to ϕ 6 cm / 2 2/5'' thick depending on knife type).
**3.** Ground following bar - ϕ 133 mm or 168 mm (5 1/4'' or 6 3/5'').

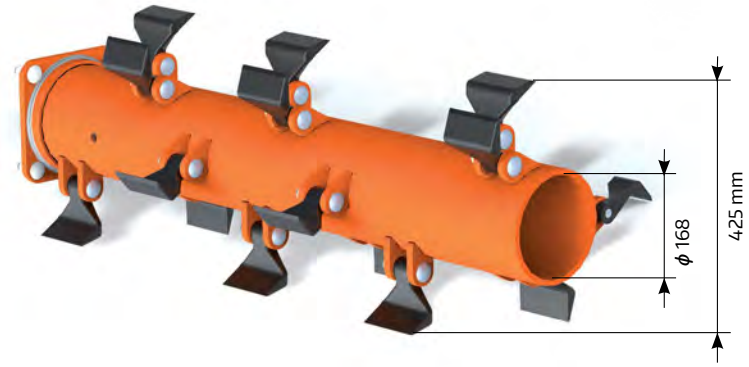


## HEAVY CLASS
(KBRP)

**1.** Flail shaft - ϕ 168 mm (6 3/5''),
wall thickness 8,8 mm / 2/5''
**2.** Cutting shrubs and bushes (up to ϕ 7 cm - 3 1/5'').
**3.** Ground following bar - ϕ 168 mm (6 3/5'').

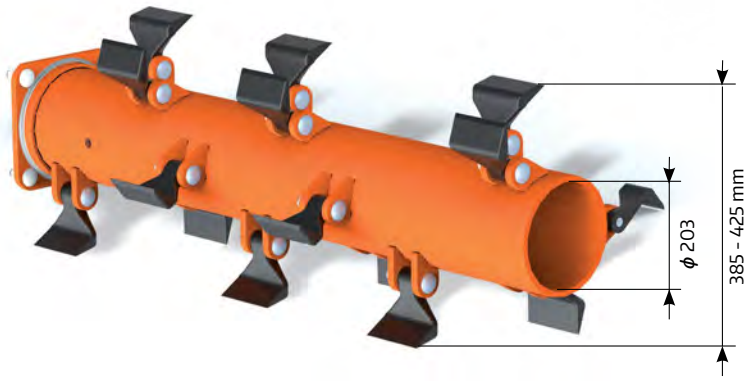


## SUPER HEAVY CLASS
(MAMUT)

**1.** Flail shaft - ϕ 203 mm (8''),
wall thickness 10 mm / 2/5''
**2.** Cutting shrubs and bushes (up to ϕ 8 cm - 3 1/5'').
**3.** Ground following bar - ϕ 203 mm (8''.)

# FLAIL KNIVES

~ 1,2 kg
(2,65 lbs)

**KNIFE TYPE I**
Max. diameter of branches to be cut:
ϕ 80 mm (3 1/5".),
Width: 140 mm, Length: 98 mm.

~ 0,6 kg
(1,3 lbs)

**KNIFE TYPE II**
Max. diameter of branches to be cut:
ϕ 35 mm(1 2/5"),
Width: 104 mm (2x 52 mm), Length: 120 mm.

~ 1,0 kg
(2,2 lbs)

**KNIFE TYPE III**
Max. diameter of branches to be cut:
ϕ 35 mm (1 2/5"),
Width: 104 mm, Length: 120 mm.

~ 1,0 kg
(2,2 lbs)

**KNIFE TYPE IV**
Max. diameter of branches to be cut:
ϕ 35 mm (1 2/5"),
Width: 102 mm, Length: 115 mm.

~ 0,6 kg
(1,3 lbs)

**KNIFE TYPE V**
Max. diameter of branches to be cut:
ϕ 50 mm (2"),
Width: 100 mm, Length: 105 mm.

~ 1,4 kg
(3,1 lbs)

**KNIFE TYPE VI**
Max. diameter of branches to be cut:
ϕ 80 mm (3 1/5"),
Width: 120 mm, Length: 110 mm.

~ 0,2 kg
(0,45 lbs)

**KNIFE TYPE VII**
Max. diameter of branches to be cut:
ϕ 20 mm (4/5"),
Width: 68 mm, Length: 73 mm.

~ 0,3 kg
(0,65 lbs)

**KNIFE TYPE VIII**
Max. diameter of branches to be cut:
ϕ 20 mm (4/5"),
Width: 84 mm (2x 42 mm), Length: 82 mm.

~ 0,3 kg
(0,65 lbs)

**KNIFE TYPE IX**
Max. diameter of branches to be cut:
ϕ 35 mm (1 2/5"),
Width: 70 mm, Length: 70 mm.

~ 0,3 kg
(0,65 lbs)

**KNIFE TYPE X**
Max. diameter of branches to be cut:
ϕ 35 mm (1 2/5"),
Width: 62 mm, Length: 62 mm.

~ 0,2 kg
(0,45 lbs)

**KNIFE TYPE XI**
Max. diameter of branches to be cut:
ϕ 15 mm (0,6"),
Width: 72 mm, Length: 88 mm.

~ 0,3 kg
(0,65 lbs)

**KNIFE TYPE XII**
Max. diameter of branches to be cut:
ϕ 15 mm (0,6"),
Width: 75 mm, Length: 122 mm.

**FLAIL KNIFE TYPEES**

| Type | Standard | Option |
|---|---|---|
| PIKO | VII | VIII, X |
| MIDO | V | II, III, IV |
| GRINO | V | II, III, IV |
| MAMUT | VI | III, IV |
| KBR | I | II, III, IV |
| KBR L | VII | VIII, IX |
| KANGU | V | II, III, IV |
| KBRP | I | II, III, IV |
| LAMA | V*, VII | VIII, IX |
| KW | I | II, III, IV |
| EMU | I | - |
| IBIS | VII | IX, XI, XII |

* only in mowing head LAMA 121 HD

Type I, V, VI, VII, IX, X - sold as 1 pc.
Type II, III, IV, VIII, XI, XII - sold as cpl. [2 pcs]

# ADVANTAGES OF **PIKO** FLAIL MOWERS

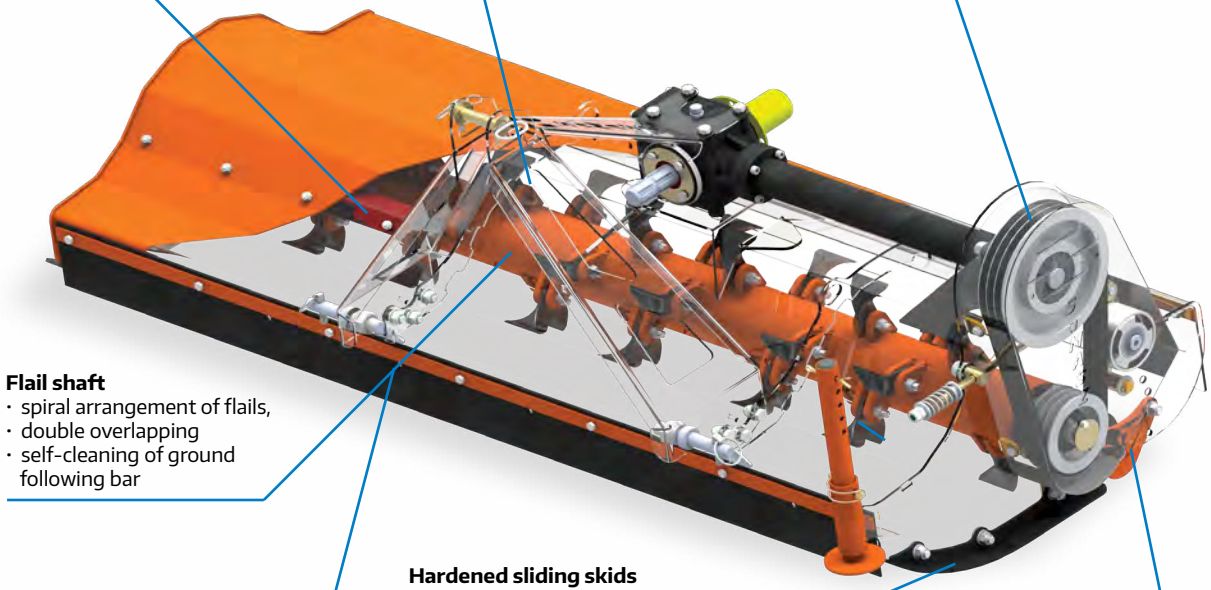


## OTHER ADVANTAGES OF PIKO FLAIL MOWERS

| | |
|---|---|
| **Design** | - double sided hitch can be installed easily for attachment either at tractor's front or rear<br>- low weight owing to use of high quality steel<br>- gearbox with integrated clutch |
| **Ground following bar** | **- automatic cleaning with flails**<br>- no pressing of cut material |
| **Flail shaft** | - equipped with double row barrel bearings<br>- arrangement of flails provides intensive shredding of material and faster drying and decomposition<br>- less drives - time savings<br>- lower load of machine and tractor |

## OPTIONAL EQUIPMENT

Hydraulic side shift (version with H)
Range up to 320 mm (13 in)

Flail knife:

**TYPE VIII**

**TYPE X**

# REAR - FRONT FLAIL MOWERS
## PIKO - light class

**~ 0,2 kg (0,45 lbs)**

**KNIFE TYPE VII**
Standard flail knife

**Standard equipment:**
Shaft with double flail spiral (double overlapping) · Overrunning clutch integrated in gearbox · Mowing height adjustment with ground following bar · Hardened sliding skids · Adjustable support leg · Replaceable counter-knives · PTO shaft · Automatic tensioning of V-belts

| TECHNICAL DETAILS | PIKO 100 | PIKO 100 H | PIKO 130 | PIKO 130 H | PIKO 150 | PIKO 150 H |
|---|---|---|---|---|---|---|
| Working width [m / ft] | 1,00 / 3'4" | | 1,30 / 4'4" | | 1,50 / 4'11" | |
| Necessary hydraulic couplers | - | 1 x double acting | - | 1 x double acting | - | 1 x double acting |
| Number of knives [pcs.] | 26 | | 34 | | 40 | |
| Number of replaceable counter-knives | 1 row / 2 pcs. | | | | 1 row / 3 pcs. | |
| Number of V-belts | 3 | | | | | |
| Flail shaft diameter [mm /in] | 108 / 4 1/4" | | | | | |
| RPM | 540 | | | | | |
| Hydraulic side-shift length [mm /ft] | - | 320 / 1' | - | 320 / 1' | - | 320 / 1' |
| Power demand [HP]* | from 20 | | from 30 | | from 35 | |
| 3-point hitch cat. | I | | | | | |
| Weight [kg / lbs] | 175 / 385 | 205 / 450 | 200 / 440 | 230 / 510 | 220 / 485 | 250 / 550 |
| Max. diameter of branches to be cut [mm /in] | 20 / 4/5" | | | | | |
| PTO shaft | **tractor - mower:** no clutch (clutch built in gearbox) | | | | | |

# ADVANTAGES OF NANO 150 HYDRO FLAIL MOWERS SERIES

**Suspension:**
- innovative suspension unit based on rockers
- the rockers set on polyurethan bushings enable very wide range of ground following
- ideal to work with front loaders
- mounting frame in standard equipment (frame at choice)

**Mechanical transport protection**
- ropes protect the machine in transport
- transport on public roads is secured

**Flail shaft:**
- spiral arrangement of the flails
- double overlapping
- self-cleaning of ground following bar

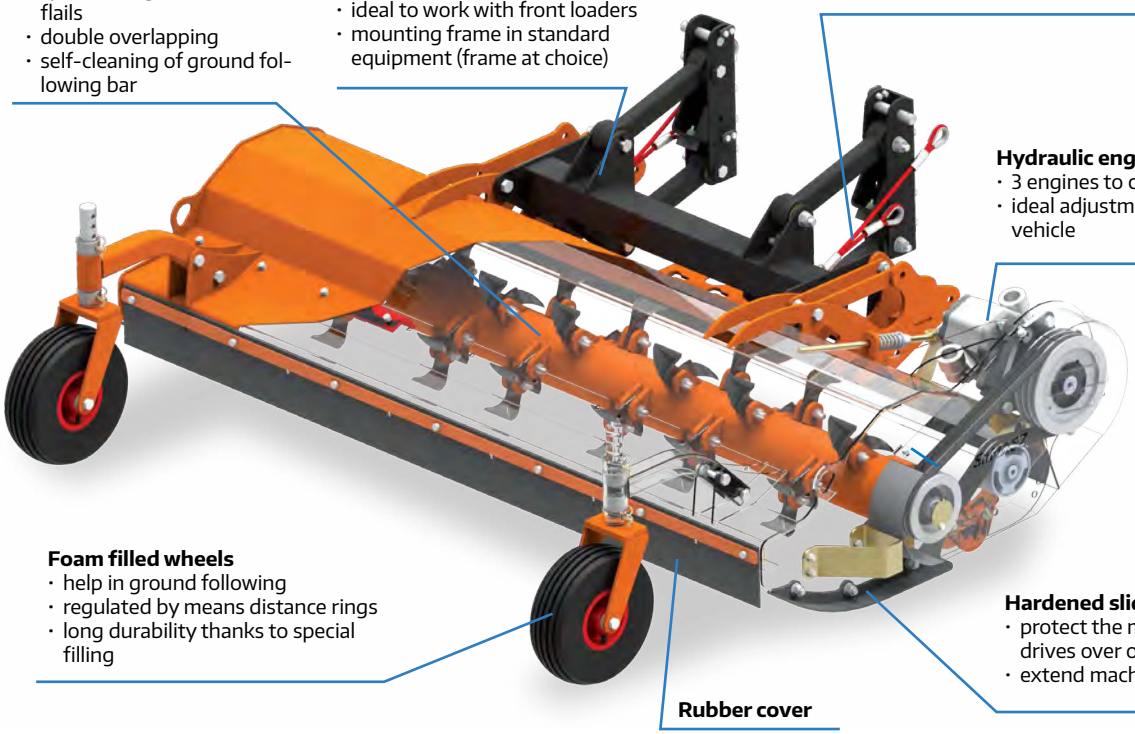

**Hydraulic engine:**
- 3 engines to choose
- ideal adjustment to co-operating vehicle

**Foam filled wheels**
- help in ground following
- regulated by means distance rings
- long durability thanks to special filling

**Hardened sliding skids**
- protect the machine during drives over obstacles
- extend machine's life

**Rubber cover**

## OTHER ADVANTAGES OF NANO FLAIL MOWERS

| | |
|---|---|
| **Design** | - swing hitch designed to operate with front loader enables wide range of ground following \ in 3 dimensions owing to poliurethan bushings<br>- mower is attached to the vehicle by means of properly adjusted frame (standard)<br>- low weight owing to use of high quality steel |
| **Ground following bar** | **- automatic cleaning with flails**<br>- no pressing of cut material |
| **Flail shaft** | - equipped with double row barrel bearings<br>- arrangement of flails provides intensive shredding of material and faster drying and decomposition<br>- less drives - time savings<br>- lower load of machine and tractor |

## OPTIONAL EQUIPMENT

Flail knife

**TYPE VIII**

**TYPE X**

# NANO 150 HYDRO
## FLAIL MOWERS SERIES

~ 0,2 kg
(0,45 lbs)

**KNIFE TYPE VII**
In standard equipment

**Standard equipment:**
Flail shaft with spiral arrangement of flails (double overlapping) · Hydraulic engine · Swing hitch with the frame at choice · Regulated ground following wheels · Ground following shaft · Hardened sliding skids · Transport lock · Automatic tensioning of V-belts · Mowing height adjustment by means of ground following shaft · Adjustable support leg · Replaceable counter-knives · PTO shaft

NEW!

| TECHNICAL DETAILS | NANO 150 HYDRO |
|---|---|
| Working width [m / ft] | 1,50 / 4'11'' |
| Necessary hydraulic couplers | - |
| Number of knives [pcs.] | 40 |
| Number of replaceable counter-knives | 1 row / 2 pcs. |
| Number of V-belts | 3 |
| Flail shaft diameter [mm /in] | 108 / 4.25 |
| Power demand [HP]* | from 35 |
| Oil pump efficiency [l/min] | 50 |
| 3-point hitch cat. | I |
| Weight [kg / lbs] | 205 / 452 |
| Max. diameter of branches to be cut [mm /in] | 20 |

# ADVANTAGES OF **MIDO** FLAIL MOWERS

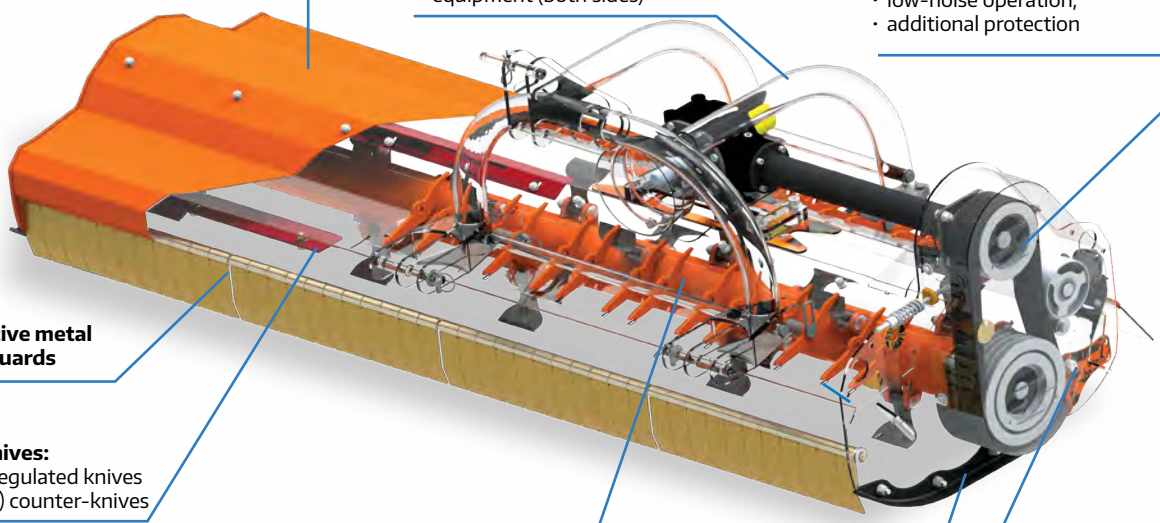

**Body:**
- made of ROC 400 steel
- resistance to tear and impact
- extends machine's life
- double shell

**Hitch**
- mechanical adjustment
- suitable to work at the rear or front of the tractor
- stiff or floating operation
- hydraulic side shift in optional equipment (both sides)

**Belt drive**
- drive transmission through 4 V-belts,
- automatic tensioning,
- low-noise operation,
- additional protection

**Protective metal sheet guards**

**Counter-knives:**
- 2 rows of regulated knives
- (front-rear) counter-knives

**Flail shaft:**
- spiral arrangement of the flails
- double overlapping
- self-cleaning of ground following bar

**Hardened sliding skids**
- protect the machine during drives over obstacles
- extend machine's life

**Ground following bar**
- working height adjustment,
- for stability improvement during work

## OTHER ADVANTAGES OF MIDO

| | |
|---|---|
| **Design** | - double sided hitch for attachment at tractor's front or rear (option)<br>- high durability owing to use of high grade steel<br>- mechanical side shift<br>- possible to change from 540 to 1000 rpm by switching V-belts<br>- gearbox with integrated clutch<br>- floating function |
| **Ground following bar** | - automatic cleaning with flails<br>- no pressing of cut material |
| **Flail shaft** | - equipped with double row barrel bearings<br>- arrangement of flails provides intensive shredding of material and faster drying and decomposition<br>- less drives - time savings<br>- lower load of machine and tractor |

## OPTIONAL EQUIPMENT

Hydraulic side shift
range up to 320 mm

Flail knife:

**TYPE II**

**TYPE III**

**TYPE IV**

# REAR - FRONT FLAIL MOWERS

## MIDO - middle class

**~ 0,6 kg (1,3 lbs)**

**KNIFE TYPE V**
Standard flail knife

**Standard equipment:**
Shaft with double flail spiral (double overlapping) · Overrunning clutch integrated in gearbox · Mowing height adjustment with ground following bar · Hardened sliding skids · Adjustable support leg · Replaceable, regulated (front-rear) counterknives · PTO shaft · Automatic tensioning of V-belts · Protective metal sheet guards · Mechanical side shift

| TECHNICAL DETAILS | NEW! MIDO 140 | NEW! MIDO 160 | NEW! MIDO 180 | NEW! MIDO 200 | NEW! MIDO 220 |
|---|---|---|---|---|---|
| Working width [m / ft] | 1,40 / 4,6 | 1,60 / 5,24 | 1,80 / 5,90 | 2,00 / 6,56 | 2,20 / 7,21 |
| Number of knives [pcs.] | 17 | 19 | 22 | 24 | 26 |
| Number of replaceable counter-knives | 2 rows | | | | |
| Number of V-belts | 3 | 4 | | | |
| Flail shaft diameter [mm /in] | 108 | 133 | | | |
| RPM | 540 / 1000 | | | | |
| Hydraulic side-shift length [mm /ft] (option) | 350 / 1,14 | | 400 / 1,31 | | |
| Power demand [HP]* | 45 | 50 | 60 | 70 | 80 |
| 3-point hitch cat. | I / II | | | | |
| Weight [kg / lbs] | 370 / 815 | 915 / 415 | 435 / 960 | 450 / 992 | 480 / 1 058 |
| Max. diameter of branches to be cut [mm /in] | 35 / 1,37" | 40 / 1.57" | | | |
| PTO shaft | **tractor - mower:** no clutch (clutch built in the gearbox) | | | | |

# ADVANTAGES OF GRINO FLAIL MOWERS

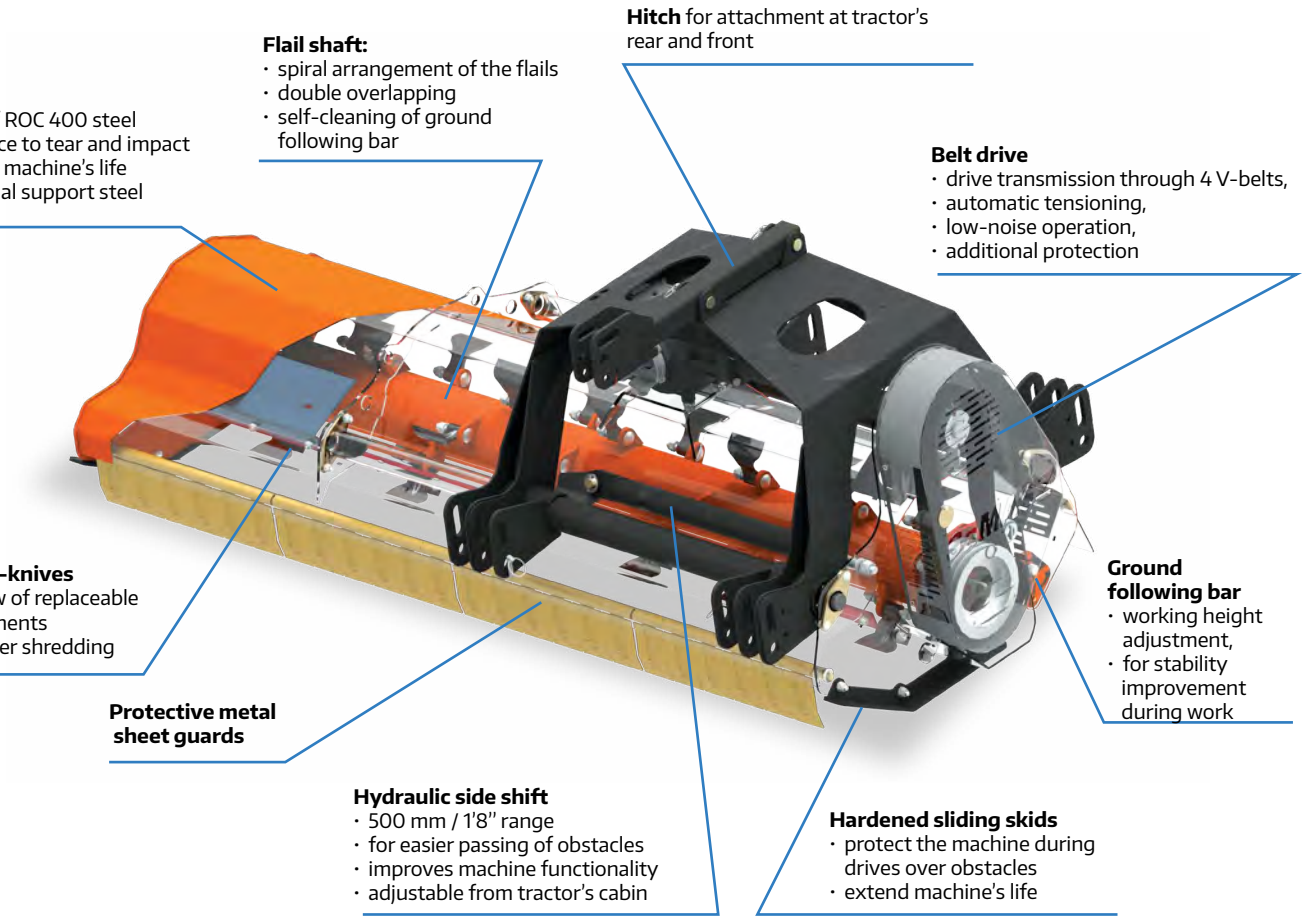


## OTHER ADVANTAGES OF GRINO FLAIL MOWERS

| | |
|---|---|
| **Design** | - double sided hitch for attachment at tractor's front or rear<br>- high durability owing to use of high grade steel<br>- metal sheet for housing reinforcement<br>- cat. I/II hitch with floating function<br>- gearbox with integrated clutch |
| **Ground following bar** | - automatic cleaning with flails<br>- no pressing of cut material |
| **Flail shaft** | - equipped with double row barrel bearings<br>- arrangement of flails provides intensive shredding of material and faster drying and decomposition<br>- less drives - time savings<br>- lower load of machine and tractor |

## OPTIONAL EQUIPMENT

Flail knife:

**TYPE II**

**TYPE III**

**TYPE IV**

# REAR - FRONT FLAIL MOWERS

## GRINO – middle class

**~ 0,6 kg (1,3 lbs)**

**KNIFE TYPE V**
Standard flail knife

**Standard equipment:**
Shaft with double flail spiral (double overlapping) · Overrunning clutch integrated in gearbox · Mowing height adjustment with ground following bar · Hardened sliding skids · Adjustable support legs · Protective metal sheet guards · Replaceable counter-knives · PTO shaft · Automatic tensioning of V-belts

| TECHNICAL DETAILS | GRINO 160 | GRINO 180 | GRINO 200 | GRINO 220 |
|---|---|---|---|---|
| Working width [m / ft] | 1,60 / 5'3" | 1,80 / 5'11" | 2,00 / 6'7" | 2,20 / 7'2" |
| Necessary hydraulic couplers | 1x double acting | | | |
| Number of knives [pcs.] | 20 | 24 | 30 | 36 |
| Number of replaceable counter-knives [row] | 1 row / 3 pcs. | | 1 row / 4 pcs. | |
| Number of V-belts | 4 | | | |
| Flail shaft diameter [mm/ in] | 168 / 6 3/5" | | | |
| RPM* | 540 / 1000 | | | |
| Hydraulic side-shift length [mm / ft] | 500 / 1'8" | | | |
| Power demand [HP] | from 50 | from 60 | from 70 | from 80 |
| 3-point hitch cat. | I / II | | | |
| Weight [kg / lbs] | 580 / 1280 | 610 / 1345 | 640 / 1410 | 665 / 1470 |
| Max. diameter of branches to be cut [mm /in] | 50 / 2" | | | |
| PTO shaft | **tractor - mower:** no clutch (clutch built in the gearbox) | | | |

# ADVANTAGES OF **MAMUT** FLAIL MOWERS

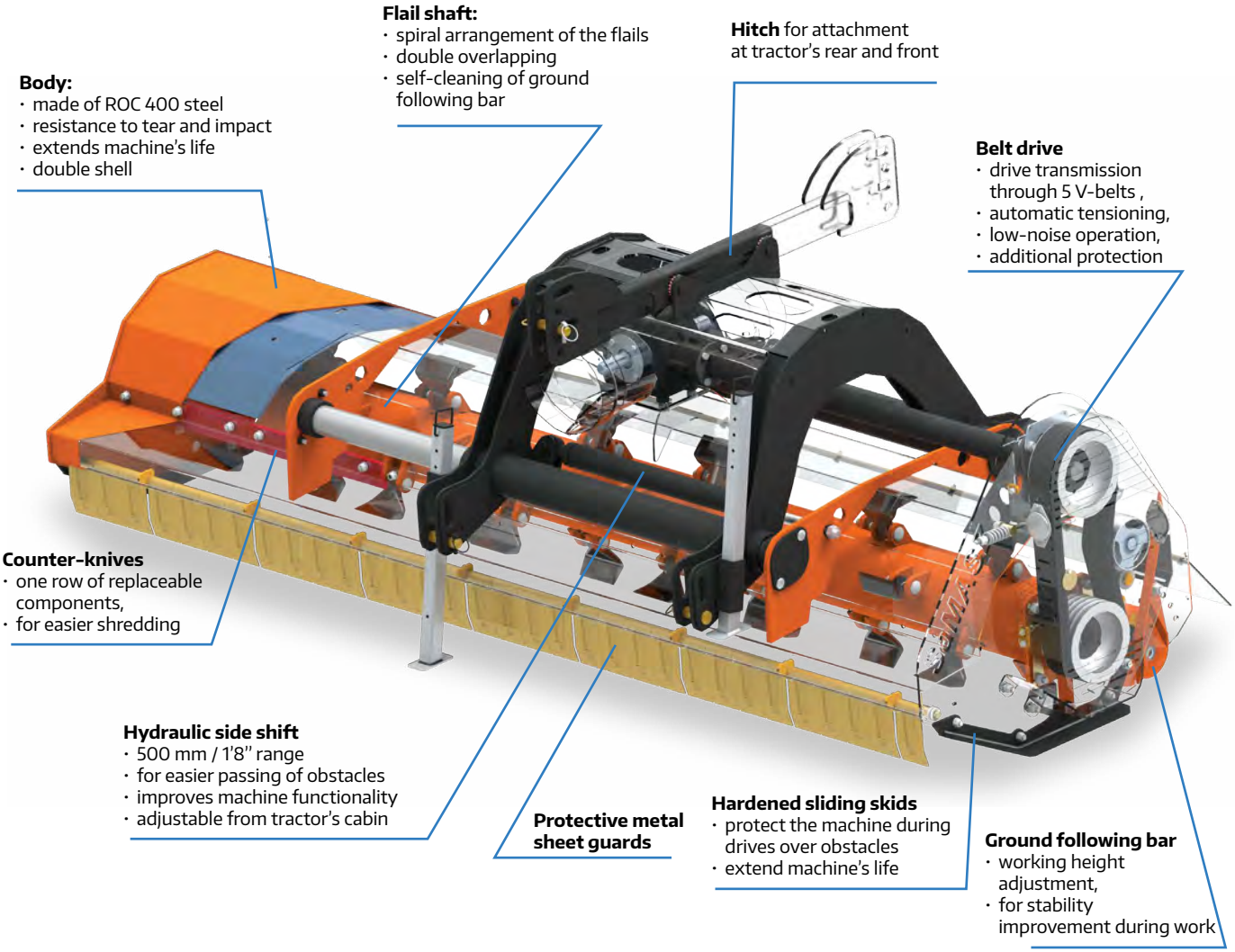


## OTHER ADVANTAGES OF MAMUT FLAIL MOWERS

| | |
|---|---|
| **Design** | - double sided hitch for attachment at tractor's front or rear<br>- high durability owing to use of high grade steel<br>- double-layer high quality metal sheet body<br>- cat. II hitch with floating function<br>- gearbox with integrated clutch |
| **Ground following bar** | - automatic cleaning with flails<br>- no pressing of cut material |
| **Flail shaft** | - equipped with double row barrel bearings<br>- arrangement of flails provides intensive shredding of material and faster drying and decomposition<br>- less drives - time savings<br>- lower load of machine and tractor |

## OPTIONAL EQUIPMENT

Flail knife:

**TYPE III**

**TYPE IV**

# REAR FLAIL MOWERS
## MAMUT - super heavy class

**~ 1,4 kg (3,1 lbs)**

**KNIFE TYPE VI**
Standard flail knife

**Standard equipment:**
Shaft with double flail spiral (double overlapping) · Overrunning clutch integrated in gearbox · Double-shell body · Mowing height adjustment with ground following bar · Hardened sliding skids · Adjustable support legs · Protective metal sheet guards · Replaceable counter-knives · PTO shaft · Automatic tensioning of V-belts

| TECHNICAL DETAILS | MAMUT 250 | MAMUT 280 | MAMUT 300 |
|---|---|---|---|
| Working width [m / ft] | 2,50 / 6'6" | 2,80 / 9'2" | 3,00 / 9'8" |
| Transport width [m / ft] | 2,70 / 8'1" | 3,00 / 9'8" | 3,20 / 10'6" |
| Necessary hydraulic couplers | 1 x double acting | | |
| Number of knives [pcs.] | 30 | 36 | 42 |
| Number of replaceable counter-knives | 1 row / 6 pcs. | 1 row / 6 pcs. | 1 row / 7 pcs. |
| Number of V-belts | 5 | | |
| Flail shaft diameter [mm /in] | ▯203 / 8" | | |
| RPM | 1000 | | |
| Power demand [HP] | from 100 | from 120 | |
| 3-point hitch cat. | II | | |
| Weight [kg / lbs] | 960 / 2115 | 1050 / 2315 | 1090 / 2403 |
| Max. diameter of branches to be cut [mm /in] | 80 / 3 1/5" | | |
| PTO shaft | **tractor - mower:** no clutch (clutch built in gearbox) | | |

# ADVANTAGES OF KBR L / KBR FLAIL MOWERS

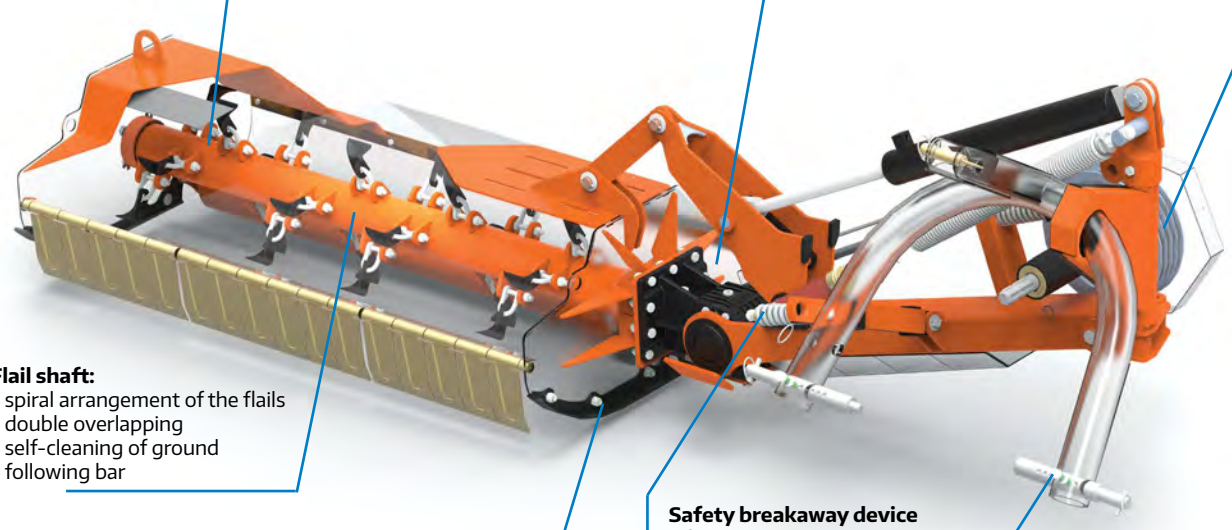

**Counter-knives**
- row of replaceable components
- for easier shredding

**Ground following bar**
- working height adjustment,
- for stability improvement during work

**Belt drive**
- drive transmission through 4 V-belts
- automatic tensioning,
- low-noise operation,
- additional protection

**Flail shaft:**
- spiral arrangement of the flails
- double overlapping
- self-cleaning of ground following bar

**Hardened sliding skids**
- protect the machine during drives over obstacles
- extend machine's life

**Safety breakaway device**
- for mower protection against damages
- mechanical for KBR L,
- hydraulic for KBR

**Hitch pins**
- adjustable,
- for easier attachment of various types of tractors

## OTHER ADVANTAGES OF KBR L / KBR FLAIL MOWERS

| | |
|---|---|
| **Design KBR L** | - enables work within -65 ° and +90 °<br>- metal sheet for housing reinforcement<br>- low weight owing to use of high-quality steel **OPTIMA**<br>- gearbox with integrated Rotex clutch<br>- front metal sheet guards |
| **Design KBR** | - enables work within -65 ° and +90 °<br>- front protective chains<br>- gearbox with integrated clutch (SaMASZ design)<br>- unlike KBR L the KBR mower is designed for work under **more difficult** conditions |
| **Ground following bar** | - automatic cleaning with flails<br>- no pressing of cut material |
| **Flail shaft** | - equipped with double row barrel bearings<br>- arrangement of flails provides intensive shredding of material and faster drying and decomposition<br>- less drives - time savings<br>- lower load of machine and tractor |

## OPTIONAL EQUIPMENT

Flail knife - **KBR L:**

**TYPE VIII**

**TYPE IX**

Flail knife - **KBR**:

**TYPE II**

**TYPE III**

**TYPE IV**

# REAR FLAIL MOWERS

## KBR L - light class

## KBR - middle class

~ 1,2 kg
(2,65 lbs)

**KNIFE TYPE I**
Standard flail knife

~ 0,2 kg
(0,45 lbs)

**KNIFE TYPE VII**
Standard flail knife

**Standard equipment KBR L:**
Shaft with double flail spiral (double overlapping) · Gearbox with integrated Rotex clutch · Hydraulic cylinder · Mechanical safety breakaway device · Mowing height adjustment with ground following bar · Rear rubber guard · Adjustable hitch pins · Front protective metal sheet guards · Adjustable support leg · PTO shaft · Automatic tensioning of V-belts

**Standard equipment KBR:**
Hydraulic cylinder · Gearbox with integrated clutch (SaMASZ design) · Hydraulic safety breakaway device · Limiting chain · Mowing height adjustment with ground following bar · Rear rubber guard · Adjustable hitch pins · Front protective metal sheet guard · PTO shaft · Automatic tensioning of V--belts

| TECHNICAL DETAILS | KBR 120 L | KBR 140 L | KBR 140 | KBR 160 |
|---|---|---|---|---|
| Working width [m / ft] | 1,20 / 3'11" | 1,40 / 4'7" | 1,40 / 4'7" | 1,60 / 5'3" |
| Necessary hydraulic couplers | 1 x single acting | | 1 x single acting | |
| Number of knives [pcs.] | 20 | 24 | 12 | 14 |
| Number of counter knives | 1 row / 1 pcs. | | 1 row / 1 pcs. | |
| Flail shaft diameter [mm /in] | ▯108 / 4 1/4" | | ▯133 / 5 1/4" | |
| RPM | 540 | | 540 | |
| Power demand [HP] | from 30 | from 35 | from 50 | from 70 |
| 3-point hitch cat. | I / II | | II | |
| Weight [kg / lbs] | 410 / 905 | 430 / 950 | 670 / 1480 | 705 / 1555 |
| Max. diameter of branches to be cut [mm /in] | 20 / 4/5" | | 60 / 2 2/5" | |
| PTO shaft | **tractor - mower:** with overrunning clutch | | | |

# ADVANTAGES OF KANGU / KBRP FLAIL MOWERS

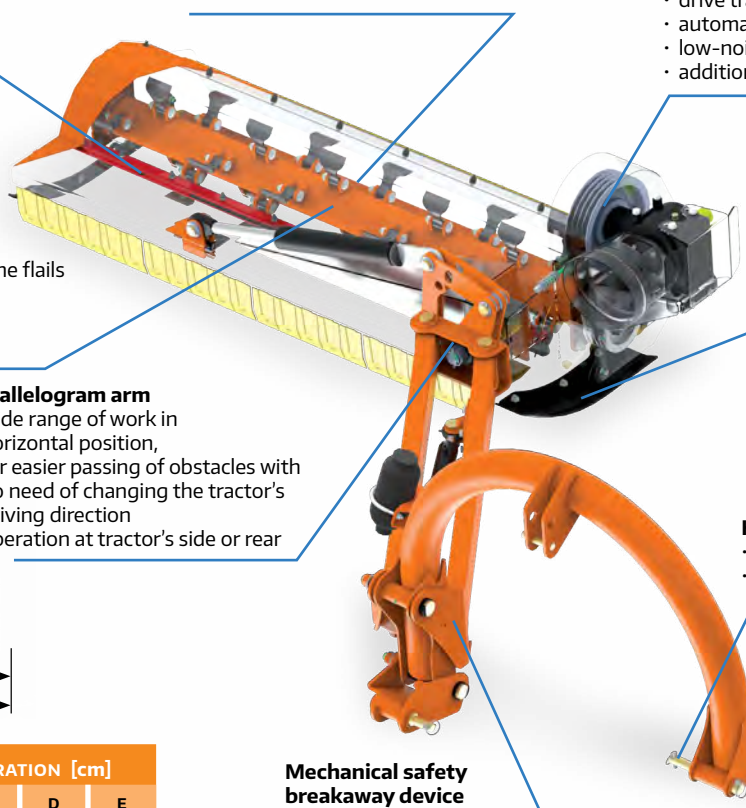

**Flail shaft**
- spiral arrangement of flails,
- double overlapping

**Belt drive**
- drive transmission through 4 V-belts,
- automatic tensioning,
- low-noise operation,
- additional protection

**Counter-knives**
- replaceable
- for easier shredding

**Flail shaft:**
- spiral arrangement of the flails
- double overlapping
- self-cleaning of ground following bar

**Hardened sliding skids**
- protect the machine during drives over obstacles
- extend machine's life

**Parallelogram arm**
- wide range of work in horizontal position,
- for easier passing of obstacles with no need of changing the tractor's driving direction
- operation at tractor's side or rear

**Hitch pins**
- adjustable,
- for easier attachment of various types of tractors

**Mechanical safety breakaway device**
- for mower protection against damages

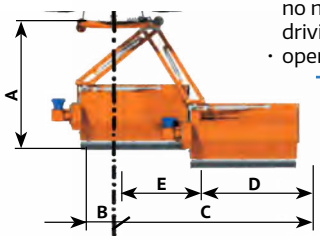


| | RANGE OF OPERATION [cm] | | | | |
|---|---|---|---|---|---|
| | A | B | C | D | E |
| KANGU 140 | 190 | 0 | 279 | 150 | 129 |
| KANGU 190 | 220 | 22 | 329 | 200 | 129 |
| KANGU 220 | 210 | 30 | 390 | 230 | 160 |
| KBRP 160 | 205 | 52 | 289 | 165 | 124 |
| KBRP 200 | 205 | 52 | 329 | 205 | 124 |

## OTHER ADVANTAGES OF KANGU / KBRP FLAIL MOWERS

| | |
|---|---|
| **Design KANGU** | - enables work within -65 ° and +90 °<br>- high durability owing to use of high grade steel<br>- gearbox with integrated clutch<br>- front metal sheet guards |
| **Design KBRP** | - enables work within -65 ° and +90 °<br>- high durability owing to use of high grade steel<br>- metal sheet for housing reinforcement<br>- front protective chains<br>- unlike KANGU the KBRP mower is designed for work under **more difficult** conditions |
| **Ground following bar** | - automatic cleaning with flails<br>- no pressing of mowed material |
| **Flail shaft** | - equipped with double row barrel bearings<br>- arrangement of flails provides intensive shredding of material and faster drying and decomposition<br>- less drives - time savings<br>- lower load of machine and tractor |

## OPTIONAL EQUIPMENT

Flail knife - KANGU / KBRP:

**TYPE II**

**TYPE III**

**TYPE IV**

# FLAIL MOWERS REAR SIDE

## KANGU - middle class

## KBRP - heavy class

**~ 1,2 kg (2,65 lbs)**

**KNIFE TYPE I**
Standard flail knife KBRP

**~ 0,6 kg (1,3 lbs)**

**KNIFE TYPE V**
Standard flail knife KANGU

**Standard equipment:**
Shaft with double flail spiral (double overlapping) · Shaft with double flail spiral (double overlapping) · Overrunning clutch integrated with gearbox (KANGU) · Mechanical safety breakaway device · Mowing height adjustment with ground following bar · Rear rubber guard · Front metal sheet guard · Wide-angle PTO shaft · Automatic tensioning of V-belts

TECHNICAL DETAILS

| | KANGU 140 | KANGU 190 | NEW! KANGU 220 | KBRP 160 | KBRP 200 |
|---|---|---|---|---|---|
| Working width [m / ft] | 1,40 / 4'7" | 1,90 / 6'3" | 2,20 | 1,60 / 5'3" | 2,00 / 6'7" |
| Necessary hydraulic couplers | 2 x double acting | | | | |
| Number of knives [pcs.] | 24 | 30 | 32 | 14 | 16 |
| Number of counter knives | 1 row / 2 pcs. | | | 1 x fixed | |
| Range of work | from -60° to +90° | | | | |
| Flail shaft diameter [mm /in] | 133 / 5,23 | 133 / 5,23 | 133 / 5,23 | 168 / 6,61 | 168 / 6,61 |
| RPM | 540 | | | | |
| Power demand [HP] | from 50 | from 70 | from 85 | from 70 | from 80 |
| 3-point hitch cat. | II | | | | |
| Weight [kg / lbs] | 540 / 1 190 | 660 / 1 455 | 755 / 1 664 | 760 / 1 675 | 825 / 1 818 |
| Max. diameter of branches to be cut [mm /in] | 50 / 2" | | | 80 / 3 1/5" | |
| PTO shaft | **tractor - mower:** wide-angle (overrunning clutch in gearbox) | | | **tractor - mower:** wide-angle with overload clutch | |

# ADVANTAGES OF IBIS / EMU FLAIL MOWERS

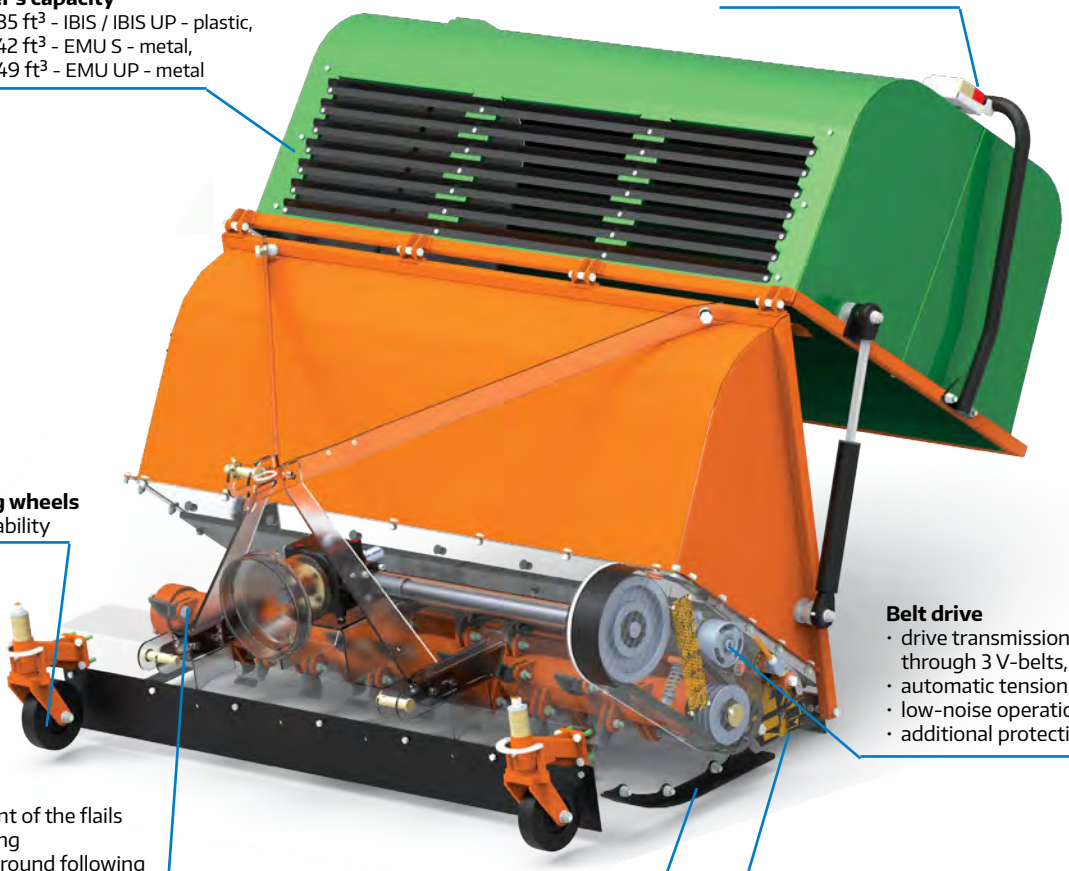

**Container's capacity**
- 1,0 m³ / 35 ft³ - IBIS / IBIS UP - plastic,
- 1,2 m³ / 42 ft³ - EMU S - metal,
- 1,4 m³ / 49 ft³ - EMU UP - metal

**Rear road lights**

**Ground following wheels**
- improve work stability

**Belt drive**
- drive transmission through 3 V-belts,
- automatic tensioning,
- low-noise operation,
- additional protection

**Flail shaft:**
- spiral arrangement of the flails
- double overlapping
- self-cleaning of ground following bar

**Hardened sliding skids**
- protect the machine when passing over obstacles
- extend machine's life

**Ground following bar**
- working height adjustment,
- for stability improvement during work

## OTHER ADVANTAGES OF EMU / IBIS FLAIL MOWERS

| | |
|---|---|
| **Design IBIS** | - simultaneous cutting and grass pick-up<br>- hydraulic discharge<br>- low weight owing to use of high-quality steel<br>- front protective rubber guards<br>- **unlike EMU intended for areas of special care**<br>- designed for low power tractors<br>- container's discharge possible directly on the trailer (IBIS UP) - up to 2 m / 6'7" |
| **Design EMU** | - simultaneous cutting and grass pick-up<br>- hydraulic discharge<br>- container's discharge possible directly on the trailer (EMU UP) - up to 2 m / 6'7"<br>- high strength owing to use of high grade steel<br>- gearbox with integrated clutch<br>- front metal sheet guards |
| **Ground following bar** | - automatic cleaning with flails<br>- stepless working height adjustment (IBIS) |
| **Flail shaft** | - equipped with double row barrel bearings<br>- arrangement of flails provides intensive shredding of material and faster drying and decomposition<br>- less drives - time savings<br>- lower load of machine and tractor |

## OPTIONAL EQUIPMENT

Flail knife - IBIS:

**TYPE IX**

**TYPE XI**

**TYPE XII**

# SELF-COLLECTING FLAIL MOWERS WITH GRASS CONTAINER

## IBIS - plastic container
## EMU - steel container

**~ 0,2 kg (0,45 lbs)**

**KNIFE TYPE VII**
Standard flail knife IBIS

**~ 1,2 kg (2,65 lbs)**

**KNIFE TYPE I**
Standard flail knife EMU

**Standard equipment:**
Shaft with double flail spiral (double overlapping) · Hydraulic discharge · Mowing height adjustment · Front protective metal sheet guards (EMU) · Road lights · PTO shaft · Front support wheels set (IBIS) · Automatic tensioning of V-belts

| TECHNICAL DETAILS | IBIS 150 | IBIS 150 UP | EMU 160 S | EMU 160 UP |
|---|---|---|---|---|
| Working width [m / ft] | 1,50 / 5' | 1,50 / 5' | 1,60 / 5'3" | 1,60 / 5'3" |
| Necessary hydraulic couplers | 1 x double acting | 2 x double acting | 1 x double acting | 2 x double acting |
| Number of knives [pcs.] | 50 | | 14 | |
| Number of counter knives | 1 row | | | |
| RPM | 540 | | | |
| Power demand [HP] | from 35 | | from 60 | |
| Container's capacity [m³ / cu.ft.] | 0,90 / 35 | | 1,20 / 42 | 1,40 / 49 |
| Discharge height [m / ft] | - | 2,00 / 6'7" | - | 2,00 / 6'7" |
| 3-point hitch cat. | I | | II | |
| Weight [kg / lbs] | 385 / 850 | 410 / 903 | 710 / 1565 | 905 / 1995 |
| Max. diameter of branches to be cut [mm /in] | 35 / 1 3/8" | | 60 / 2 2/5" | |
| PTO shaft | **tractor - mower:** with overrunning clutch | | | |

# ADVANTAGES OF KOLIBER / KWT / CAMEL EXTENSION ARMS

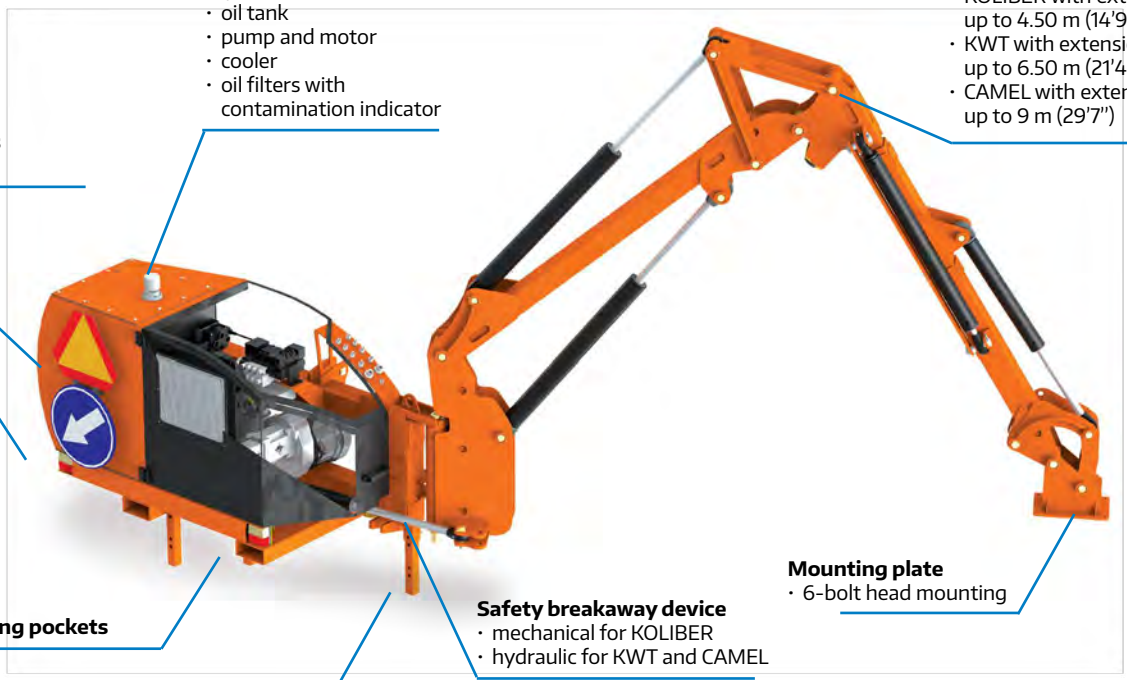


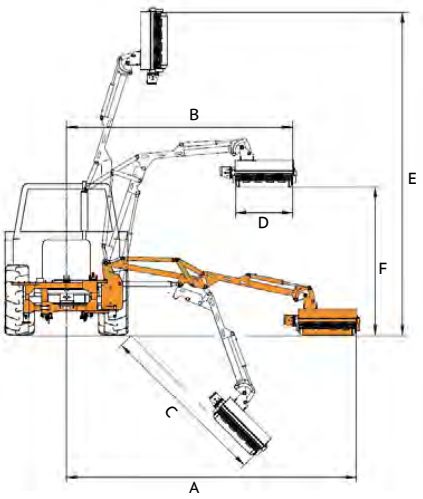


| | EXTENSION ARM REACH WITH MOWING HEAD [cm/in] | | | | | |
|---|---|---|---|---|---|---|
| | A | B | C | D | E | F |
| KOLIBER 400 | 410 / 161 | 310 / 122 | 270 / 106 | 120 / 47 | 455 / 179 | 220 / 87 |
| KOLIBER 450 | 460 / 181 | 350 / 138 | 320 / 126 | 120 / 47 | 505 / 199 | 250 / 98 |
| KWT 550 / KW 110 | 570 / 224 | 440 / 173 | 340 / 134 | 110 / 43 | 640 / 252 | 290 / 114 |
| KWT 550 / KW 125 | 570 / 224 | 450 / 177 | 340 / 134 | 130 / 51 | 640 / 252 | 290 / 114 |
| KWT 550 / KW 140 | 580 / 228 | 450 / 177 | 350 / 138 | 150 / 59 | 650 / 256 | 290 / 114 |
| KWT 550 / LAMA 120 | 580 / 228 | 450 / 177 | 350 / 138 | 120 / 47 | 650 / 256 | 290 / 114 |
| KWT 550 / LAMA 140 | 600 / 236 | 470 / 185 | 370 / 146 | 140 / 55 | 670 / 246 | 290 / 114 |
| KWT 650 / KW 110 | 660 / 260 | 530 / 209 | 430 / 169 | 110 / 43 | 720 / 283 | 300 / 118 |
| KWT 650 / KW 125 | 660 / 260 | 530 / 209 | 430 / 169 | 130 / 51 | 720 / 283 | 300 / 118 |
| KWT 650 / KW 140 | 675 / 266 | 540 / 213 | 440 / 173 | 150 / 59 | 730 / 287 | 300 / 118 |
| KWT 650 / LAMA 120 | 670 / 264 | 540 / 213 | 440 / 173 | 150 / 59 | 730 / 287 | 300 / 118 |
| KWT 650 / LAMA 140 | 690 / 272 | 560 / 220 | 460 / 181 | 140 / 55 | 750 / 295 | 300 / 118 |
| CAMEL 900 | 900 / 354 | 690 / 272 | 660 / 260 | 120 / 47 | 960 / 378 | 520 / 205 |

## OTHER ADVANTAGES OF KOLIBER / KWT / CAMEL EXTENSION ARMS

| | |
|---|---|
| **Design** | - arm mounted to tractor's rear 3-point linkage<br>- additional stabilizing brackets (KWT, CAMEL)<br>- high suspended original arm enables safe drive over obstacles<br>- opened cover on hydraulic and electrical units |
| **Hydraulic unit** | - independent, equipped with own cooler and pump<br>- oil tank with level indicator and temperature sensor<br>- arm equipped with hydraulic connectors<br>- hydraulic pump with capacity up to 100 l/min (26 GPM)<br>- available in option for 1000 rpm |
| **Steering** | - cable-type as **standard**<br>• valves controlled with Bowden cables<br>- electric (E) ON-OFF in **option**:<br>• arm is moved at constant speed adjusted with choke valves<br>- proportional steering (EP) available in **option**:<br>• arm motion speed dependent on joystick position<br>• simultaneous three cylinder control possible |

# REAR EXTENSION ARMS

## KOLIBER - reach up to 4,5 m (14'9")
## KWT - reach up to 6,5 m (21'4")
## CAMEL - reach up to 9,0 m (29'7")

**Standard equipment:**
Hydraulic safety breakaway device (KWT and CAMEL) · Mechanical safety breakaway device (KOLIBER) · Cable-type control panel · Temperature and oil level indicators · Hydraulic lock · Cooler with oil filters · Adjustable support legs · Warning plates · Rear road ligts · PTO shaft · Stabilizing brackets (KWT, CAMEL)

| TECHNICAL DETAILS | KOLIBER 400 | KOLIBER 450 | KWT 550 | KWT 650 | CAMEL 900 |
|---|---|---|---|---|---|
| Arm reach [m / ft]* | 4,00 / 13'1" | 4,50 / 14'9" | 5,50 / 18' | 6,50 / 21'4" | 9,00 / 29'7" |
| Necessary hydraulic couplers | - | | | 1 x double acting | |
| Recommended tractor's weight [kg / lbs] | 2400 / 5290 | 2900 / 6395 | 3700 / 8160 | 4300 / 9480 | 7500 / 16535 |
| Oil tank capacity [L / cu.ft.] | 120 / 31 us gal | | 200 / 52 us gal | | |
| Pump power [kW] | 33 | | | | |
| Pump efficiency (l/min) / (GPM) | 90 / 23 | | | | |
| Transport width [cm / ft] | 175 / 5'9" | 185 / 6'1" | 195 / 6'5" | | 190 / 6'3" |
| Transport height [cm / ft] | 265 / 8'8" | 290 / 9'6" | 350 / 11'6" | | 400 / 13'1" |
| RPM | 540 | | | | |
| Power demand [HP] | from 55 | | from 80 | from 90 | from 100 |
| 3-point hitch cat. | II | | | | III |
| Weight [kg / lbs] | 530 / 1170 | 580 / 1280 | 1055 / 2325 | 1140 / 2515 | 1370 / 3020 |
| PTO shaft | **tractor - mower:** no clutch | | | | |
| 3-point hitch support brackets | - | | Turnbuckle | | |

# ADVANTAGES OF **KWT 651 E / EP** EXTENSION ARM

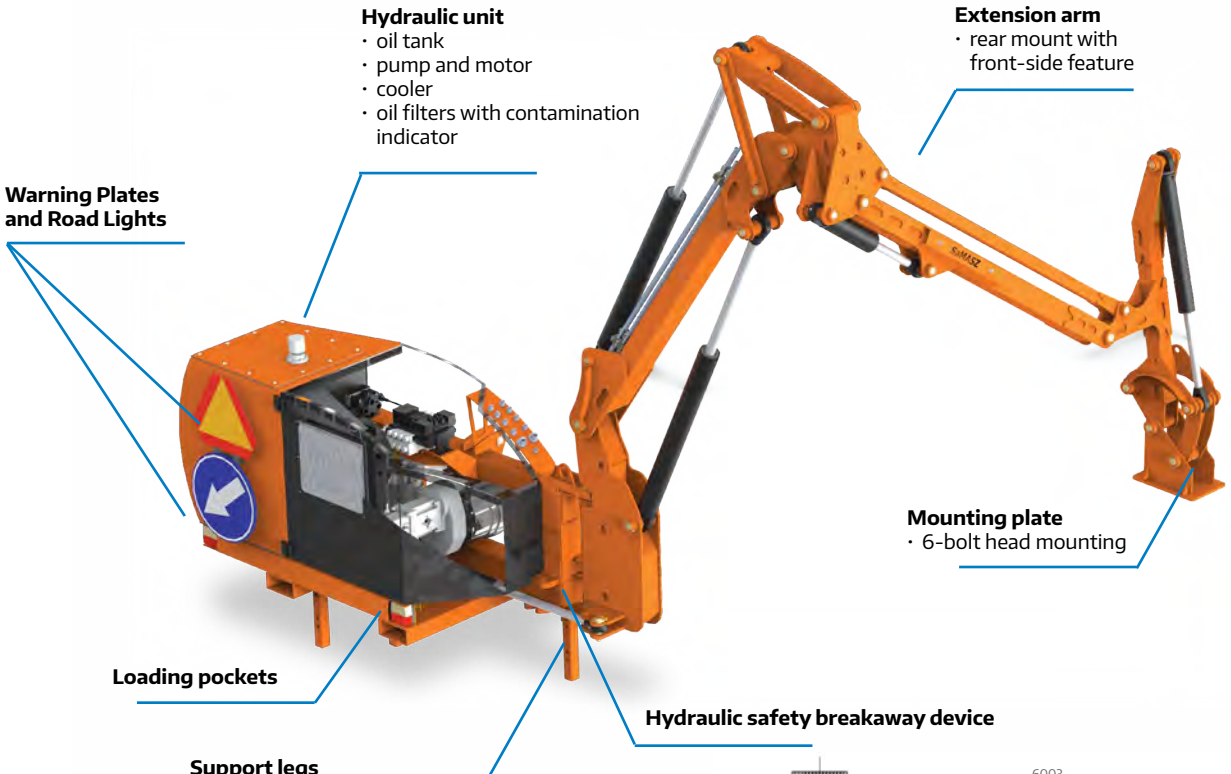


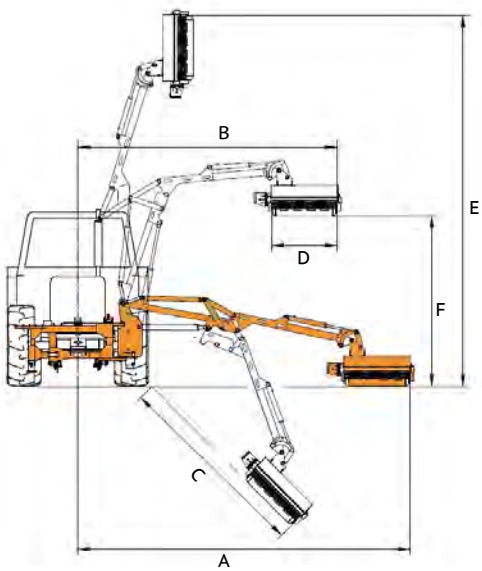


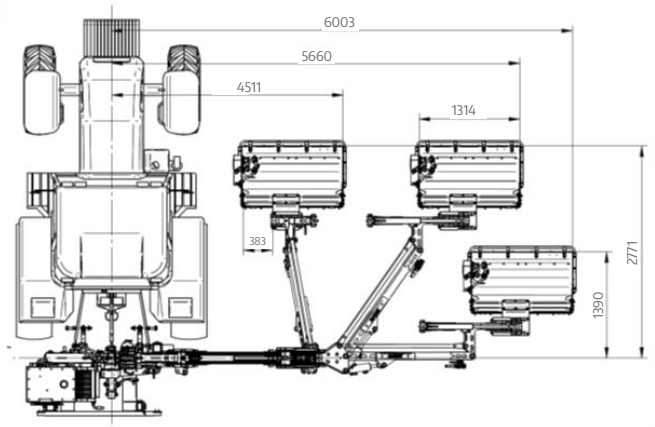


| | EXTENSION ARM REACH WITH WORKING HEAD [cm / in] | | | | | | |
|---|---|---|---|---|---|---|---|
| | A | B | C | D | E | F | G |
| **KWT 651 E / KW 110** | 610 / 240 | 530 / 209 | 430 / 169 | 110 / 43 | 720 / 283 | 300 / 118 | 190 / 75 |
| **KWT 651 E / KW 125** | 625 / 246 | 530 / 209 | 430 / 169 | 130 / 51 | 720 / 283 | 300 / 118 | 190 / 75 |
| **KWT 651 E / KW 140** | 650 / 256 | 540 / 213 | 440 / 173 | 150 / 59 | 730 / 287 | 300 / 118 | 190 / 75 |
| **KWT 651 E / LAMA 120** | 630 / 248 | 540 / 2013 | 440 / 173 | 150 / 59 | 730 / 287 | 300 / 118 | 190 / 75 |
| **KWT 651 E / LAMA 140** | 650 / 256 | 560 / 220 | 460 / 181 | 140 / 55 | 750 / 295 | 300 / 118 | 190 / 75 |

## OTHER ADVANTAGES OF KWT 651 EXTENSION ARM

| | |
|---|---|
| **Design** | - arm mounted to tractor's rear 3-point linkage<br>- additional stabilizing plates<br>- high suspension point enables safe and comfortable operation<br>- opened cover on hydraulic and electrical units<br>- enables moving an arm to the front, so that working head is in line with an operator - better visibility and comfortable work |
| **Hydraulic unit** | - indpendent, equipped with own cooler and pump<br>- oil tank with level indicator and temperature sensor<br>- arm equipped with hydraulic connectors<br>- hydraulic pump with capacity up to 100 l/min (26 GPM)<br>- available in option for 1000 rpm |
| **Steering** | - electric (E) as **standard**:<br>• steering with one cylinder possible<br>- proportional steering (EP) available in **option**:<br>• arm motion speed dependent on joystick position<br>• simultaneous three cylinder control possible |

# REAR EXTENSION ARMS
## KWT 651 E / EP

- reach up to 6,5 m (21'4'')

**Standard equipment:**
Electric steering with joystick · Hydraulic safety device · Temperature and oil level indicator · Transport safety device with valve · Cooler with oil filters · Stabilizing brackets · 3-point linkage support brackets · PTO shaft · Regulated support legs · Warning plates with road lights

| TECHNICAL DETAILS | KWT 651 |
|---|---|
| Arm reach [m / ft]* | 6,40 / 21' |
| Recommended tractor's weight [kg / lbs] | 4300 / 9480 |
| Oil tank capacity [L / cu.ft.] | 200 / 52 us gal |
| Pump power [kW] | 33 |
| Pump efficiency (l/min) / (GPM) | 90 / 23 |
| Transport width [cm / ft] | 195 / 6'5'' |
| Transport height [cm / ft] | 350 / 11'6'' |
| RPM | 540 |
| Power demand [HP] | from 90 |
| 3-point hitch cat. | II |
| Weight [kg / lbs] | 1230 / 2710 |
| PTO shaft | **tractor - mower:** no clutch |
| 3-point linkage support brackets | Turnbuckle |

* Arm reach with working head 1,2 m (3'11'')

# EXTENSION ARM ATTACHMENTS

## LIGHT WEIGHT MOWING HEAD LAMA 120 / 140

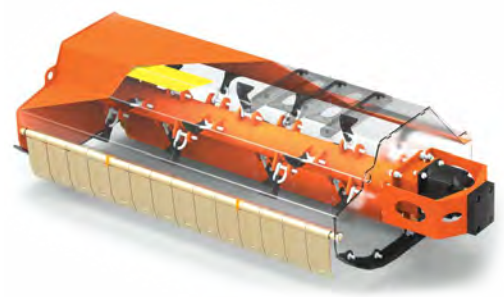

| TECHNICAL DETAILS | LAMA 120 | LAMA 140 |
|---|---|---|
| Working width [m / ft] | 1,20 / 3'11" | 1,40 / 4'7" |
| Flail shaft diameter [mm/ in] | 108 / 4 1/4" | |
| Number of knives (type VII - in standard equipment) | 20 | 24 |
| Oil pump efficiency (l/min) / (GPM) | 90-100 / 23-26 | |
| Hydraulic pressure [bar / PSI] | 210 / 3045 | |
| Weight [kg / lbs] | 185 / 410 | 205 / 450 |
| Arm type | KOLIBER, KWT, CAMEL | KOLIBER, KWT, CAMEL |

## LIGHT WEIGHT MOWING HEAD LAMA 121 / 141

- hydraulic motor mounted on top of mowing head
- manual side-shift

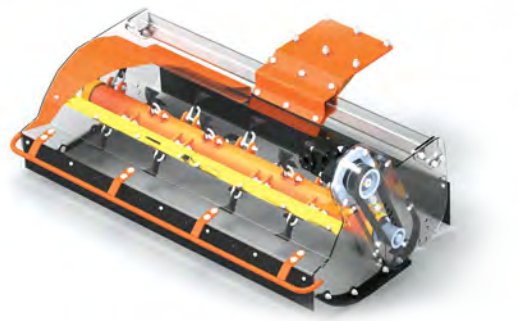

| TECHNICAL DETAILS | LAMA 121 | LAMA 141 |
|---|---|---|
| Working width [m / ft] | 1,20 / 3'11" | 1,40 / 4'7" |
| Flail shaft diameter [mm/ in] | 108 / 4 1/4" | |
| Number of knives (type VII - in standard equipment) | 20 | 24 |
| Oil pump efficiency (l/min) / (GPM) | 90-100 / 23-26 | |
| Hydraulic pressure [bar / PSI] | 210 / 3045 | |
| Weight [kg / lbs] | 245 / 540 | 255 / 560 |
| Arm type | KWT, CAMEL | KWT |

## LIGHT WEIGHT MOWING HEAD LAMA 101 P

- hydraulic motor mounted on top of mowing head
- hydraulic regulation of discharge

| TECHNICAL DETAILS | LAMA 101 P |
|---|---|
| Working width [m / ft] | 1,06 / 3' 4" |
| Flail shaft diameter [mm/ in] | 108 / 4 1/4" |
| Necessary hydraulic couplers | 1 x double acting |
| Number of knives | 30 |
| Oil pump efficiency (l/min) / (GPM) | 90-100 / 23-26 |
| Hydraulic pressure [bar / PSI] | 210 / 3045 |
| Weight [kg / lbs] | 250 / 550 |
| Arm type | KOLIBER, KWT, CAMEL |

## LIGHT WEIGHT MOWING HEAD LAMA 121 HD

- hydraulic motor mounted on top of mowing head
- mechanical side shift

| TECHNICAL DETAILS | LAMA 121 HD |
|---|---|
| Working width [m / ft] | 1,20 / 3'11" |
| Flail shaft diameter [mm/ in] | 133 / 5 1/4" |
| Number of knives (type V - in standard equipment) | 20 |
| Oil pump efficiency (l/min) / (GPM) | 90-100 / 23-26 |
| Hydraulic pressure [bar / PSI] | 210 / 3045 |
| Weight [kg / lbs] | 270 / 595 |
| Arm type | KWT |

## MOWING HEAD KW 110 / 125 / 140 – HEAVY WEIGHT

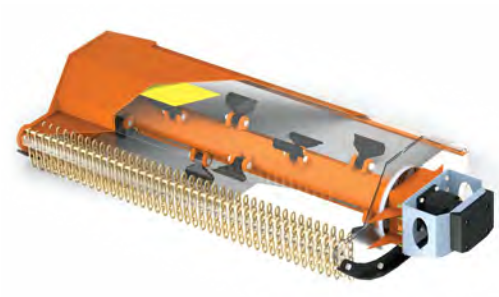

| TECHNICAL DETAILS | KW 110 | KW 125 | KW 140 |
|---|---|---|---|
| Working width [m / ft] | 1,10 / 3'7" | 1,25 / 4'1" | 1,40 / 4'7" |
| Flail shaft diameter [mm/ in] | 133 / 5 1/4" | | |
| Number of knives (type I - in standard equipment) | 10 | 10 | 12 |
| Oil pump efficiency (l/min) / (GPM) | 90-100 / 23-26 | | |
| Hydraulic pressure [bar / PSI] | 210 / 3045 | | |
| Weight [kg / lbs] | 265 / 585 | 305 / 675 | 330 / 730 |
| Arm type | KWT | | |

## MOWING HEAD KW 111 / 126 / 141 – HEAVY WEIGHT

- hydraulic motor mounted on top of mowing head
- mechanical side shift

| TECHNICAL DETAILS | KW 111 | KW 126 | KW 141 |
|---|---|---|---|
| Working width [m / ft] | 1,10 | 1,25 | 1,40 / 4'7" |
| Flail shaft diameter [mm/ in] | 133 | 133 | 133 / 5 1/4" |
| Number of knives (type V - in standard equipment) | 12 | 14 | 16 |
| Oil pump efficiency (l/min) / (GPM) | 90 - 100 | 90 - 100 | 90-100 / 23-26 |
| Hydraulic pressure [bar / PSI] | 210 | 210 | 210 / 3045 |
| Weight [kg / lbs] | 250 | 270 | 280 / 620 |
| Arm type | KWT | KWT | KWT |

# ADDITIONAL ATTACHMENTS

## QUICK – COUPLING

## SWIVEL MOUNT – MECHANICAL

- rotation range up to 45°
- Lama 121, 141, 121 HD

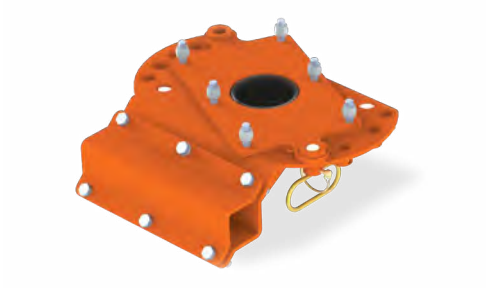

## SWIVEL MOUNT – HYDRAULIC

- with all mowing heads,
- stepless rotation range up to 180°

## MOUNT EXTENSION

- attachment to LAMA 121 / 141 with additional bracket
- movement range up to 260 mm (~10 in)

## CIRCULAR SAW PT3-190 / PT3-190 F* / PT4-250 / PT4-250 F*

| TECHNICAL DETAILS | PT 3-190 | PT 3-190 F* | PT 4-250 | PT 4-250 F* |
|---|---|---|---|---|
| Working width [m / ft] | 1,90 / 6'3" | 1,90 / 6'3" | 2,50 / 8'2" | 2,50 / 8'2" |
| Circular blade [pcs.] | 3 | 3 | 4 | 4 |
| Oil pump efficiency (l/min) / (GPM) | 85-100 / 22-26 | 55 - 70 / 14-18 | 85-100 / 22-26 | 55 - 70 / 14-18 |
| Hydraulic pressure [bar / PSI] | 180 / 2610 | | | |
| Weight [kg / lbs] | 195 / 430 | 195 / 430 | 250 / 550 | 250 / 550 |
| Arm type | KWT, CAMEL | FISHER | KWT | FISHER |

* Free flow required

## SCISSOR TRIMMER PG 150/ PG 150 F / PG 200 / PG 200 F

| TECHNICAL DETAILS | PG 150 | PG 150 F* | PG 200 | PG 200 F* |
|---|---|---|---|---|
| Working width [m / ft] | 1,50 / 4' 11" | 1,50 / 4' 11" | 2,00 / 6' 7" | 2,00 / 6' 7" |
| Max diameter of cut branches [mm / ft] | 100 / 4" | | | |
| Oil pump efficiency (l/min) / (GPM) | 45-60 / 11-18 | | | |
| Hydraulic pressure [bar / PSI] | 160 / 2320 | | | |
| Weight [kg / lbs] | 200 / 440 | 200 / 440 | 240 / 530 | 240 / 530 |
| Arm type | KWT, CAMEL | FISHER | KWT, | FISHER |

* for FISHER carrier

## HYDRAULIC FRONT-LOADER EXTENSION ARM FISHER (FOR PG AND PT)

| TECHNICAL DETAILS | FISHER |
|---|---|
| Side-shift [m/ft] | 1,06 / 3'4" |
| Head rotation | 100° |
| Necessary hydraulic couplers* | 1 x double acting 1 x single acting |
| Hydraulic pressure [bar / PSI] | 210 / 3045 |
| Weight with mounting frame [kg/lbs]** | 250 / 550 |
| Designation | PG F, PT F |

* operation with circular saw PT requires free flow - with medium pair of hydraulic couplers.
** use of snow plow adapters possible

# EXTENSION ARM ATTACHMENTS

## STUMP GRINDER FP 20

| TECHNICAL DETAILS | FP 20 |
|---|---|
| Number of knives | 16 |
| Oil pump efficiency (l/min) / (GPM) | 70-100 / 18-26 |
| Hydraulic pressure [bar / PSI] | 210 / 3045 |
| Weight [kg / lbs] | 90 / 200 |
| Arm type | KWT, CAMEL |

## ROAD SHOULDER GRINDER RP 110

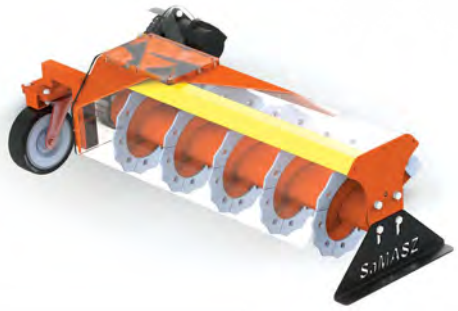


| TECHNICAL DETAILS | RP 110 |
|---|---|
| Working width [m / ft] | 1,10 / 3' 7" |
| Flail shaft diameter [mm / ft] | ▯168 / 6 3/5" |
| Oil pump efficiency (l/min) / (GPM) | 70-100 / 18-26 |
| Hydraulic pressure [bar / PSI] | 210 / 3045 |
| Weight [kg / lbs] | 255 / 560 |
| Arm type | KWT, CAMEL |

## DITCH CLEANER OR OR 080

| TECHNICAL DETAILS | OR 080 |
|---|---|
| Working width [m / ft] | 0,80 / 2'7" |
| Number of knives | 8 |
| Oil pump efficiency (l/min) / (GPM) | 80-100 / 21- 26 |
| Hydraulic pressure [bar / PSI] | 210 / 3045 |
| Weight [kg / lbs] | 225 / 495 |
| Arm type | KWT, CAMEL |

## ROAD SIGN WASHER ROLLER 1000

| TECHNICAL DETAILS | ROLLER 1000 |
|---|---|
| Working width [m / ft] | 1,00 / 3' 4'' |
| Oil pump efficiency (l/min) / (GPM) | 40 / 10 |
| Hydraulic pressure [bar / PSI] | 200 / 2900 |
| Weight [kg / lbs] | 140 / 310 |
| Arm type | KWT, CAMEL |

## TANK 1000

| TECHNICAL DETAILS | TANK 1000 |
|---|---|
| Capacity [L/us gal] | 1000 / 264 |
| Weight (without liquid) [kg / lbs] | 170 / 375 |
| Power [V] | 12 |
| Hydraulic pressure [bar / PSI] | 2,5 / 36 |
| Oil pump efficiency (l/min) / (GPM) | 15 / 15 gpm |

## MOP

| TECHNICAL DETAILS | MOP 120 | MOP 140 | MOP 160 | MOP 200 |
|---|---|---|---|---|
| Working width [cm/ft] | 120 / 3' 11'' | 140 / 4'7'' | 160 / 5'3'' | 200 / 6'7'' |
| Brush rpm | 140 - 160 | | | |
| Brush diameter [cm/in] | 60 / 24 | | | |
| Working speed [km/h / mph] | up to 10 / 7 mph | | | |
| Container capacity [L / us gal] | 70/18 | 90/23 | 130/34 | 170/44 |
| Dimensions [cm/ft] Length / width / height | 140 / 140 / 114 4'7''/4'7''/3'9'' | 160 / 140 / 114 5'3''/4'7''/3'9'' | 180 / 140 / 114 5'11''/4'7''/3'9'' | 200 / 140 / 114 6'7''/4'7''/3'9'' |
| Weight [kg / lbs] | 260 /570 | 275 / 605 | 310 / 685 | 320 / 705 |

SaMASZ®

POLSKIE CENTRUM CERTYFIKACJI
CERTYFIKAT ISO 9001

SaMASZ Sp. z o.o.
16-060 Zabłudów
ul. Trawiasta 1
tel.: +48 85 664 70 31
fax: +48 85 664 70 41

Your dealer:

www.samasz.com
e-mail: samasz@samasz.pl

www.samasz.com

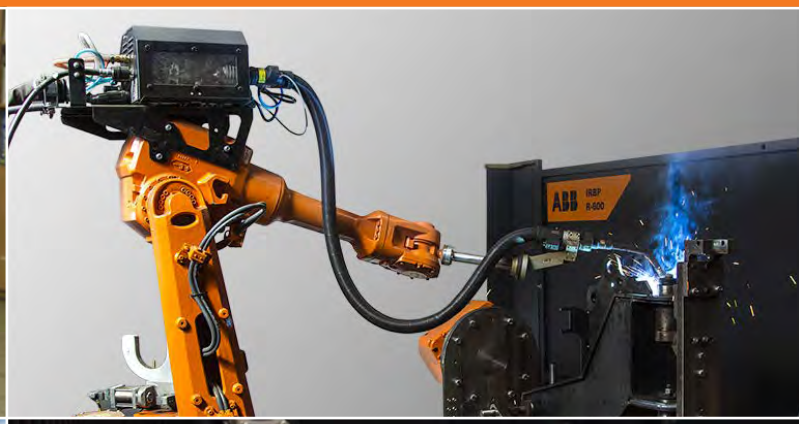

True passion and constant seeking of the best solutions are amongst the ideas, which have been essential for the SaMASZ employees and have become the key to the company's success.

What contributes the most to constant and dynamic development of the company are close contact with our customers and staying open to their needs. Thanks to dialogue with our present and future clients and trying to meet their expectations we create and strengthen up the basis of our dynamic success. We are creating the brand, which is already well recognized not only in the whole Europe, but also in the world.

Considering constant development as our top priority, we invest in product research. Our employees are the most talented Technical University graduates, who are not only experts in their own fields, but also bring in a great dose of professionalism and passion to their duties. You can always count on their competence and reliability.

Today, SaMASZ is the top Polish and one of the major European manufacturers of forage machinery. Our offer includes more than 300 types of different machines: drum mowers, disc mowers, tedders, rakes, flail mowers, extension arms or snow plows. Since the beginning we managed to manufacture and sell more than 95,000 mowers and few thousands of other machines. We export to more than 50 countries around the world. Our sales network includes approx. 60 companies in Poland and approx. 70 abroad.

Our main goal, which is constant development and implementation to our production cutting edge technology in order to keep the world's top quality. We are fully aware, that in this ever changing reality, customers tend to seek trading partners who are trustworthy, and therefore we have an ambition of being considered as a reliable and professional manufacturer.

1/ 2018

Technical data and equipment provided herein, as well as images of the products may be different due to constant technical development.